Quality Equipment

PRODUCT DATA SHEET

LOAD001
LOADING RAMP

The loading ramp is built for strength and practicality, with an 11° slope designed for safe and easy movement of pigs between pens and vehicles, making it a dependable choice for livestock handling. It also has eyelets welded on for use with hurdles.

LOADING RAMP

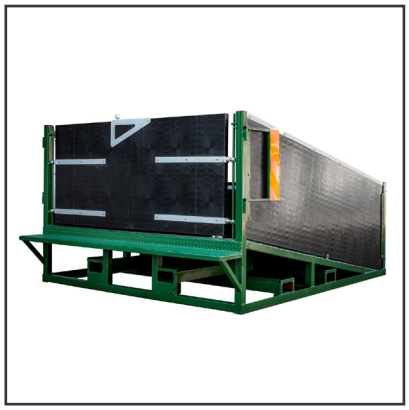

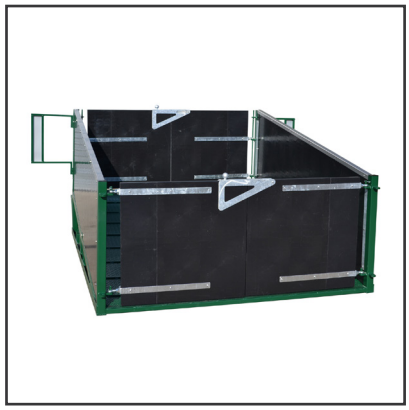

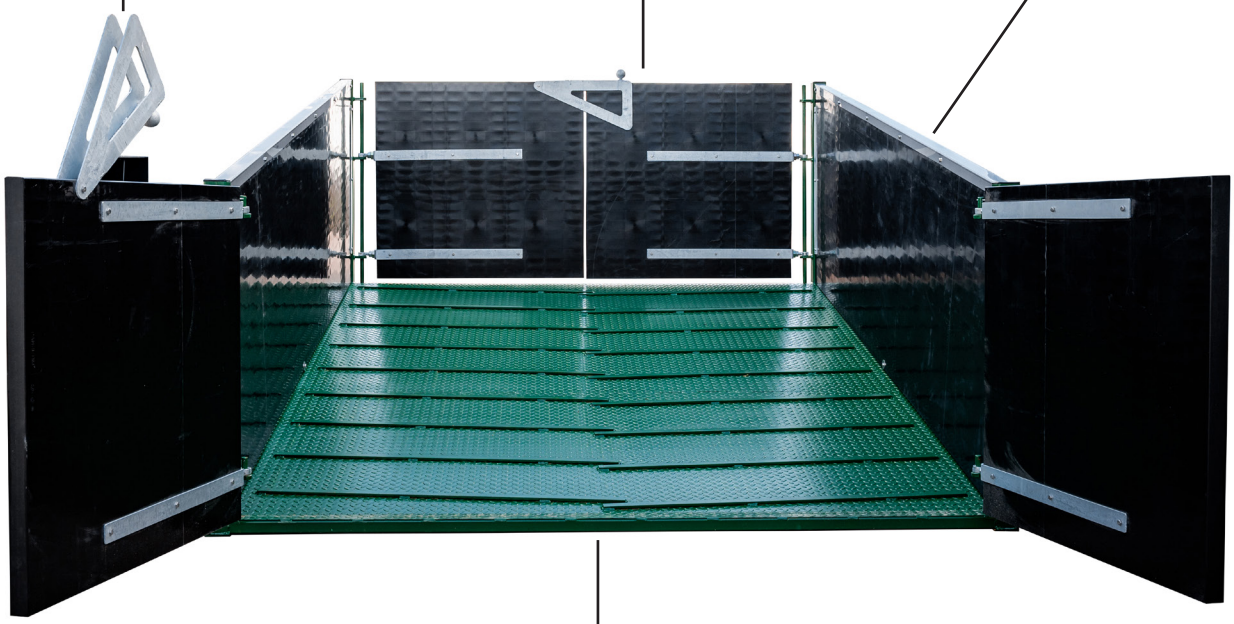

COMPANY NAME
G.E BAKER UK LTD

GET IN TOUCH
01359 240529
info@quality-equipment.co.uk

ADDRESS
Poplar Business Centre, The Heath,
Heath Road, Woolpit, Suffolk, IP30 9RN

Quality Equipment

PRODUCT DATA SHEET

LOADING RAMP

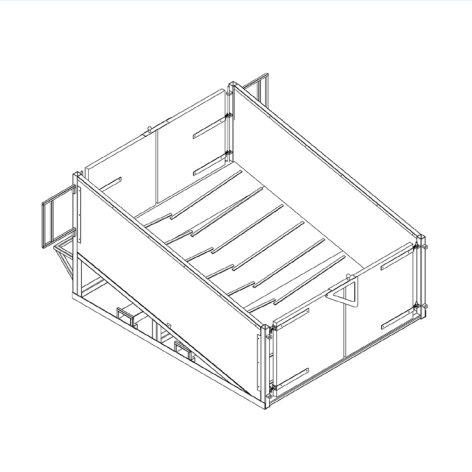

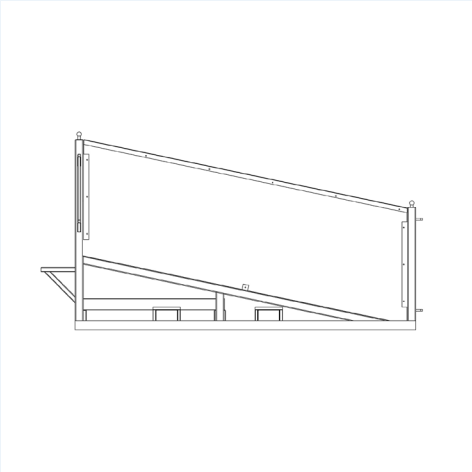

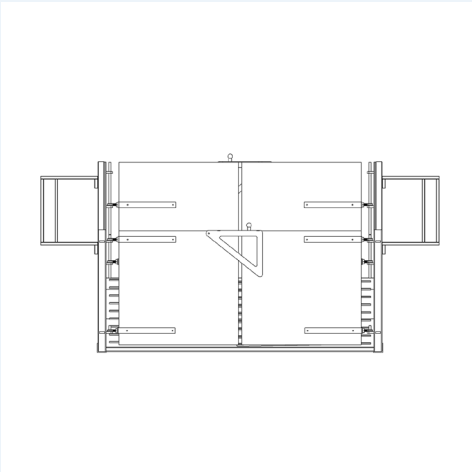

PRODUCT SPECIFICATION

Frame Material	Heavy Duty Steel
Undercoat finish	Red Oxide
Finish Coating	Semi-gloss paint
Dimensions(mm)	2500W x 3000L x 1615H
Tailboard step height	490mm off the ground
Flooring	Checkerplate Anti-Slip
Gate Material	Paneltim® Panels
Weight	850KG

PRODUCT FEATURES

- **Swing-out reverse guides** – Help drivers back up with confidence.
- **Multiple telehandler lifting points** – Designed for easy movement around the farm or site.
- **Smooth, easy-clean Paneltim® surface** – Hygienic, non-porous and quick to wash down.
- **Integrated fixed step** – Allows the lorry tailgate to sit flush and secure during loading.
- **Dual-side gate access** – Opens from both sides for flexible loading and better stock flow.
- **Reinforced with stainless steel channels** – Ensures rigidity, even under heavy use.
- **Gentle 11° incline** – Designed for safe and stress-free movement.
- **Non-slip flooring** – Improves grip and reduces the chance of slips or falls.

** This product qualifies under the FETF grant criteria; however, please note that we are not involved in the application or approval process, and the final decision on funding grants rests solely with DEFRA**

COMPANY NAME

G.E BAKER UK LTD

GET IN TOUCH

01359 240529

info@quality-equipment.co.uk

ADDRESS

Poplar Business Centre, The Heath,
Heath Road, Woolpit, Suffolk, IP30 9RN